L&L
Luce&Light

Made in Italy

HONEYCOMB LOUVRE ASSEMBLY KRILL 2.0 - KRILL 3.0
ASSEMBLAGGIO NIDO D'APE KRILL 2.0 - KRILL 3.0
ASSEMBLAGE GRILLE NID D'ABEILLE KRILL 2.0 - KRILL 3.0
MONTAGE WABENRASTER KRILL 2.0 - KRILL 3.0
ENSAMBLAJE REJILLA PANAL DE ABEJA KRILL 2.0 - KRILL 3.0

+DWHKI230A0
rev. 02 17/05/2023
C90

WHKI20A0 - WHKI30A0

Accessories / Accessori / Accessoires / Zubehör / Accesorios

CE UK CA

1

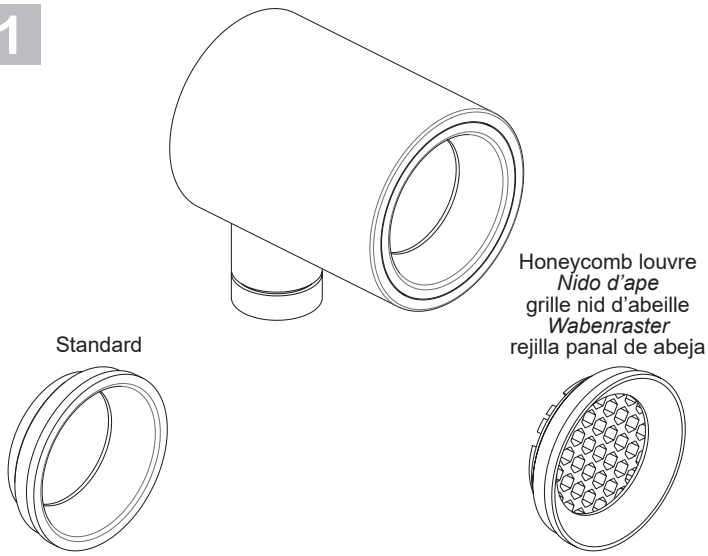

2

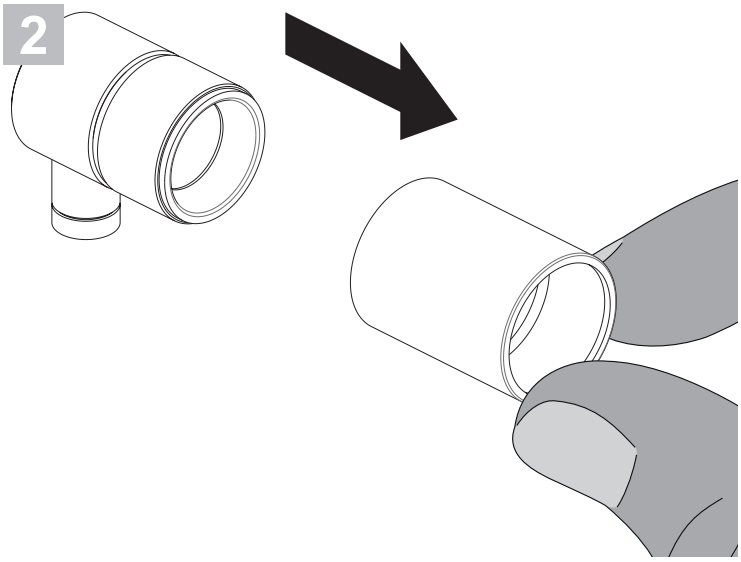

3

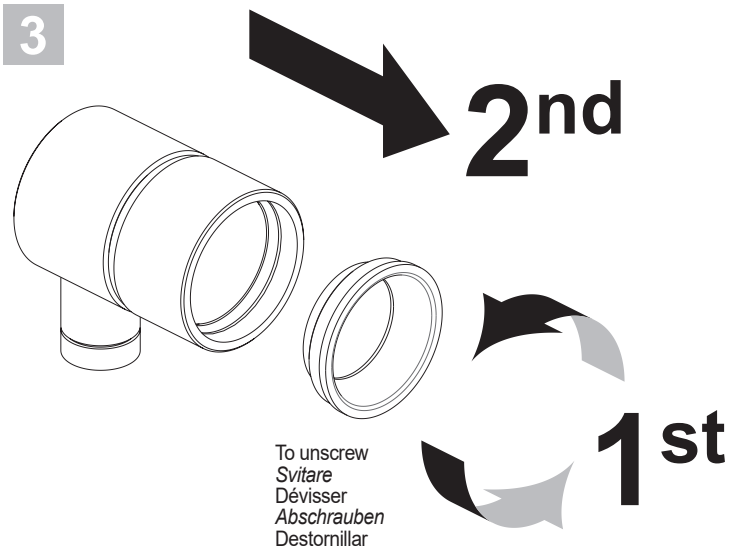

4

5

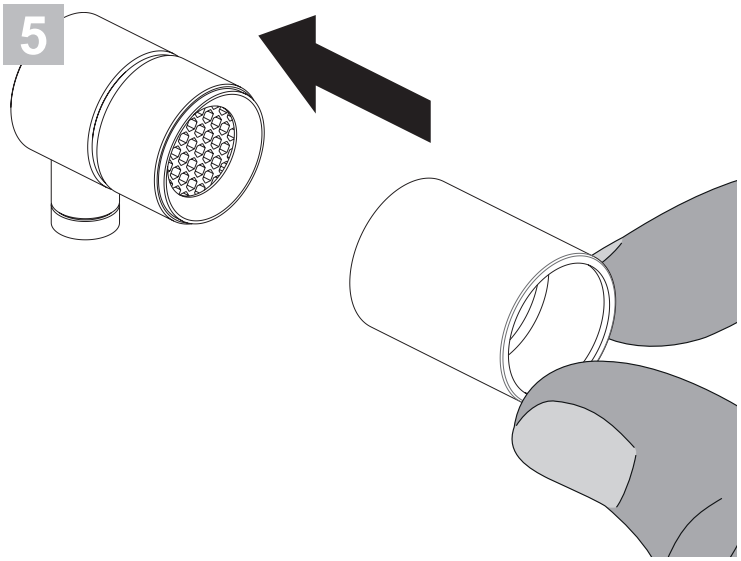

6

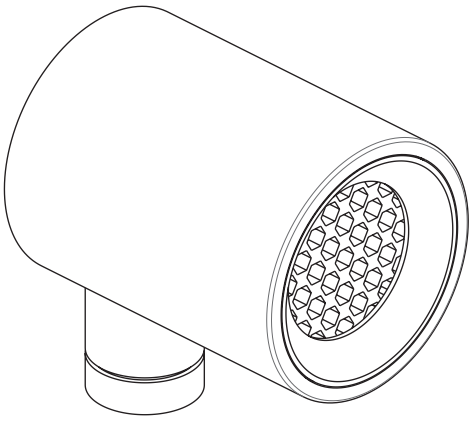

L&L Luce&Light srl / Via Trescalini, 5 / 36031 Dueville, Vicenza / Italy / T +39 0444 36 05 71 / F +39 0444 59 43 04
E lucelight@lucelight.it / www.lucelight.it