L&L
Luce&Light

Made in Italy

TRANSPARENT IP44 ROUND SCREEN (COMBINA D 4)
SCHERMO TONDO IP44 TRASPARENTE (COMBINA D 4)
ECRAN ROND TRANSPARENT IP44 (COMBINA D 4)
TRANSPARENTER IP44-RUNDBILDSCHIRM (COMBINA D 4)
PANTALLA REDONDA IP44 TRANSPARENTE (COMBINA D 4)

WRCC40R1T

Accessories / Accessori / Accessoires / Zubehör / Accesorios

+DWRCC40R1T
rev. 02 17/05/2023
C90

CE UK CA

1

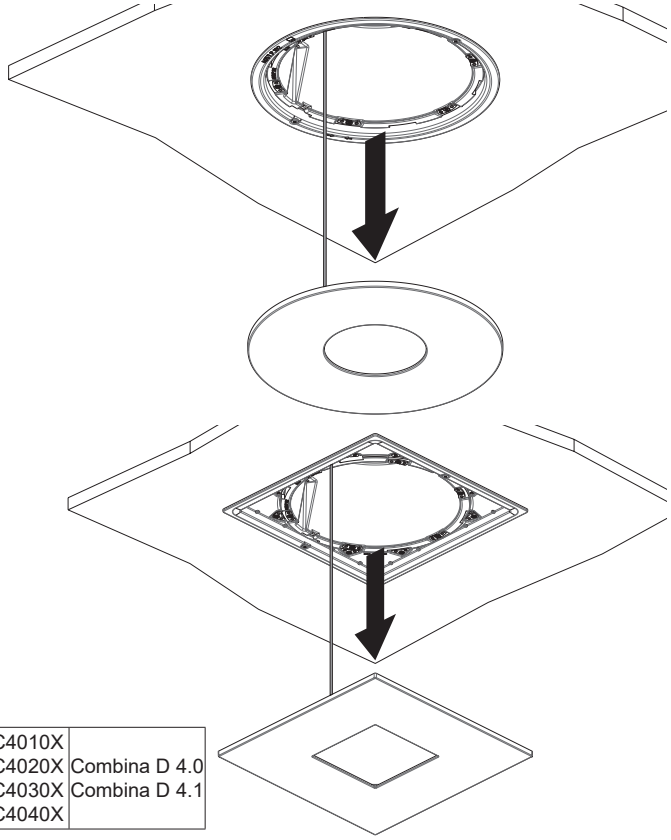

WZCC4010X	
WZCC4020X	Combina D 4.0
WZCC4030X	Combina D 4.1
WZCC4040X	

2

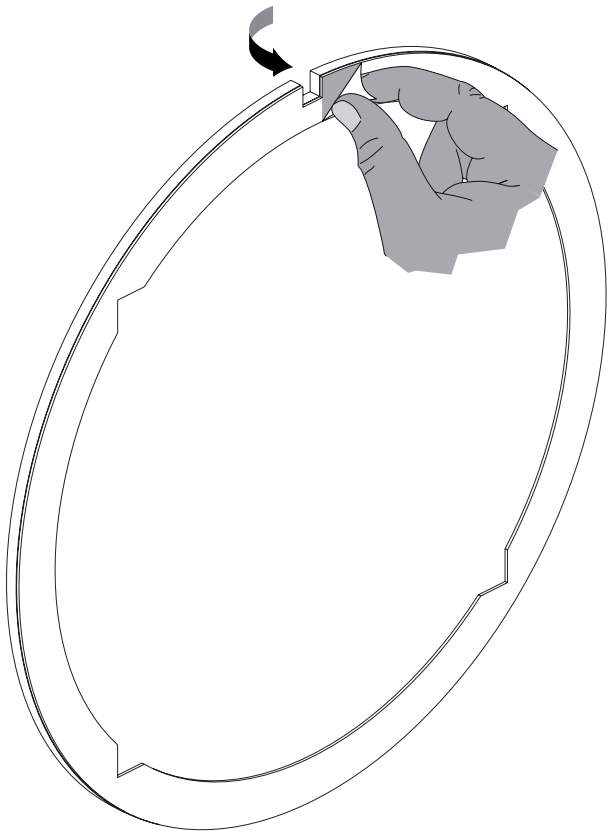

3

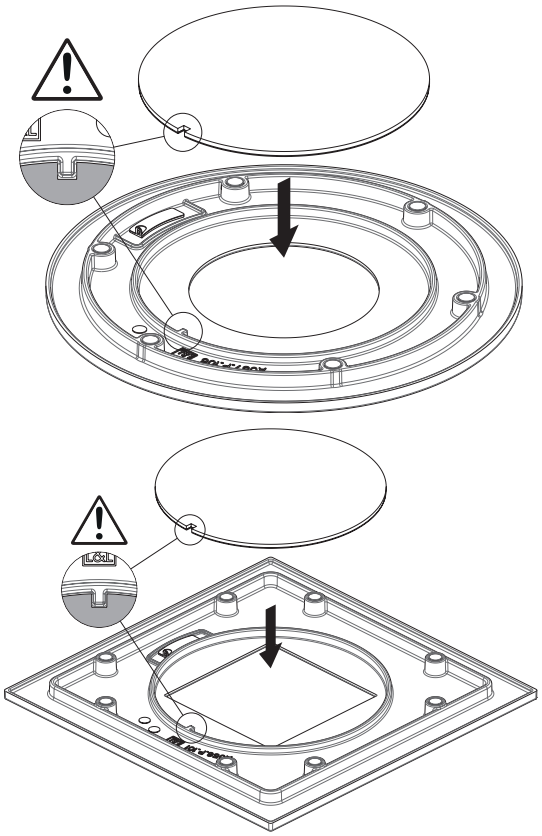

4

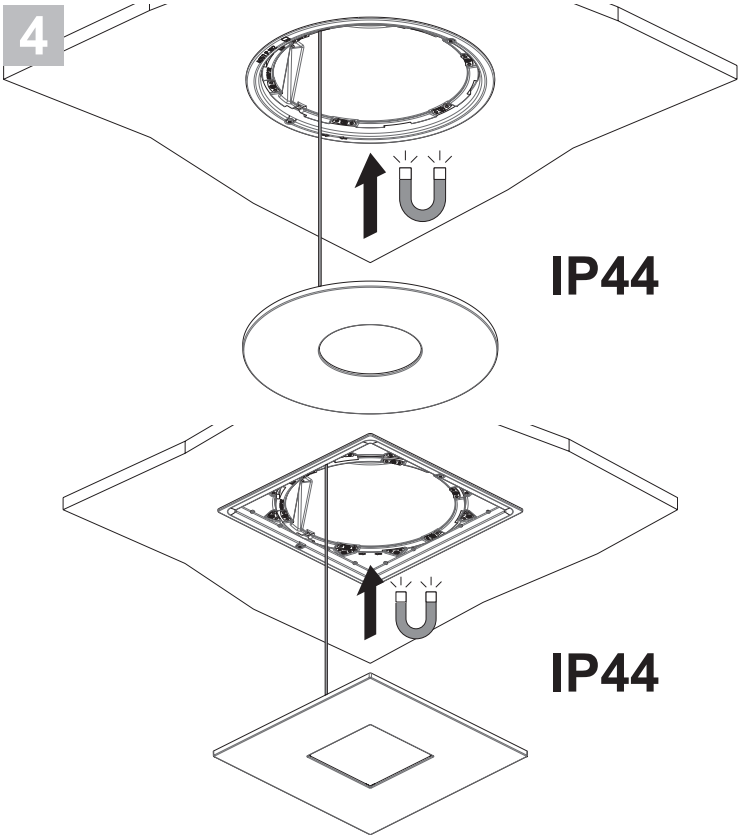

L&L Luce&Light srl / Via Trescalini, 5 / 36031 Dueville, Vicenza / Italy / T +39 0444 36 05 71 / F +39 0444 59 43 04
E lucelight@lucelight.it / www.lucelight.it